100W Single Output Standard with approval

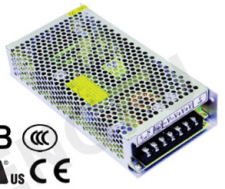

- AC input range selected by switch
- High reliability
- Approvals: UL/ CUL/ CB/ CE/ CCC
- Protections: overload/ over voltage/ short circuit
- 5 years limited warranty
- F610 199 x 98 x 39(mm)

AC input voltage range ..... 85~132/ 170~264VAC selected by switch
Input frequency ..... 47~63Hz
Inrush current ..... cold start, 20A/115V, 40A/230V
Input leakage current ..... ＜1mA/ 230VAC
Line regulation (full load) ..... ≤±0.5%
Output voltage adjust range ..... ±10%
Output overload protection ..... 110~130%, shut off, re-power on to recover
Output over voltage protection ..... 115~150%, shut off, re-power on to recover
Withstand voltage ..... I/P -O/P: 3.0KVAC/1min
I/P -F/G: 1.5KVAC/1min
O/P-F/G: 0.5KVAC/1min
Rise, Hold up time ..... 50ms, 20ms@full load (typical)
Operating temperature ..... -20℃~+50℃
Safety standards GB4943, UL60950, EN60950
EMC standards ..... GB9254, EN55022 classB, EN55024
EN61000-3-2,3, EN61000-4-2,3,4,5,6,8,11
Cooling method ..... convection
Packing 0.65kg/pcs, 28pcs/CTN

Model	DC Output		Load regul.	R&N	Efficiency
HF100W-SF-5	5V	20.0A	0.5%	100mV	79%
HF100W-SF-7.5	7.5V	13.5A	0.5%	100mV	79%
HF100W-SF-12	12V	8.5A	0.5%	120mV	81%
HF100W-SF-13.8	13.8V	7.5A	0.5%	120mV	83%
HF100W-SF-15	15V	6.7A	0.5%	120mV	83%
HF100W-SF-24	24V	4.5A	0.5%	150mV	84%
HF100W-SF-48	48V	2.2A	0.5%	150mV	86%

* 3~48VDC output all available.
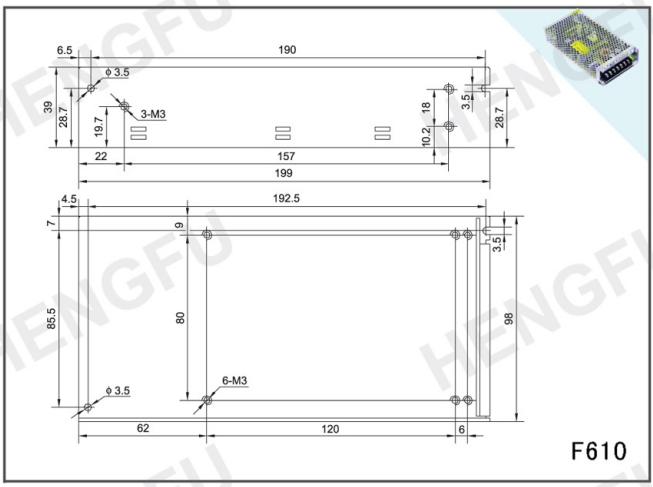
Drawing