www.agelectronica.com

SGS-THOMSON MICROELECTRONICS

# TDA8146

## EAST/WEST CORRECTION FOR RECTANGULAR TV-TUBES

- LOW POWER DISSIPATION
- PULSE WIDTH MODULATOR FOR SWITCH MODE OPERATION
- OUTPUT SINK CURRENT UP TO 800mA
- OUTPUT SOURCE CURRENT UP TO 100mA
- PARASITIC PARABOLA SUPPRESSION DURING VERTICAL FLYBACK
- VERTICAL CURRENT SENSE INPUTS GROUND COMPATIBLE
- PROGRAMMABLE PARABOLA CURRENT GENERATOR FOR DIFFERENT TV-TUBES
- EXTERNAL KEYSTONE ADJUSTMENT

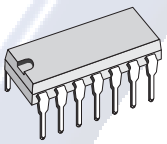

**DIP14**
(Plastic Package)

**ORDER CODE :** TDA8146

### DESCRIPTION

The TDA8146 is a monolithic integrated circuit in a 14 pin dual-in-line plastic package.

The TDA8146 is designed for use in the east-west pin-cushion correction by driving a diode modulator in TV and monitor applications.

Since the parabola current generator is programmable the device can operate with different CRTs.

### PIN CONNECTIONS

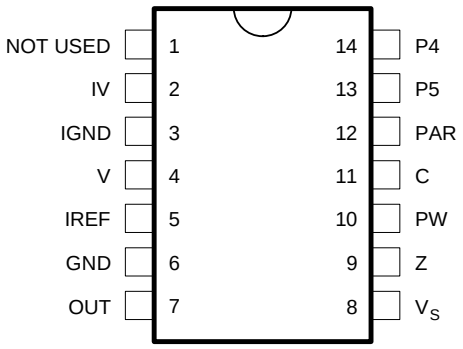


8146-01.EPS



www.agelectronica.com

www.valelectronica.com



## BLOCK DIAGRAM

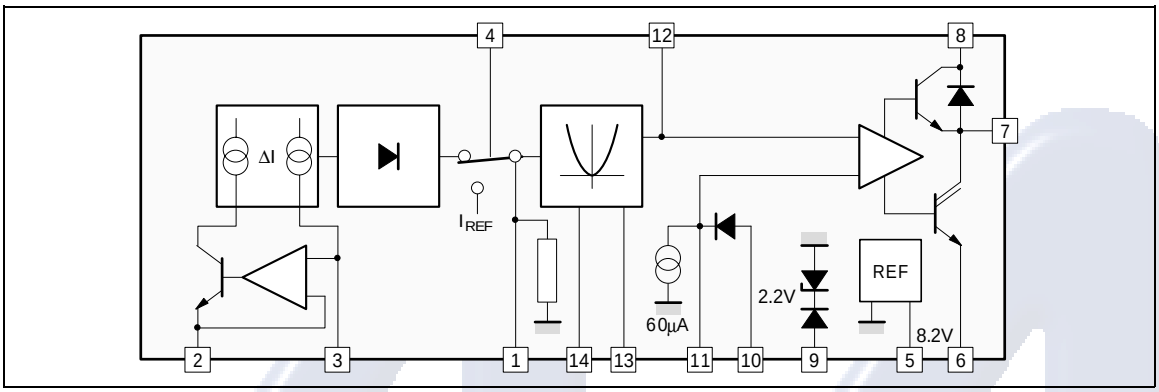


## ABSOLUTE MAXIMUM RATINGS

| Symbol | Parameter | Value | Unit |
|---|---|---|---|
| $I_7$ | Output Sink Current | 800 | mA |
| $I_7$ | Output Source Current | 100 | mA |
| $V_S$ | Supply Voltage | 33 | V |
| $V_4$ | Vertical Flyback Input Voltage | – 0.3 to 60 | V |
| $V_{10}$ | Input Voltage at Pin 10 | – 10 to $V_S$ | V |
| $V_9$ | Input Voltage at Pin 9 | – 10 to 20 | V |
| $V_{in}$ | Input Voltage at all other Pins | – 0.3 to $V_S$ | V |
| $T_{stg}$ | Storage Temperature | – 40 to 150 | °C |
| $T_j$ | Junction Temperature | 0 to 150 | °C |

8146-01.TBL

## THERMAL DATA

| Symbol | Parameter | | Value | Unit |
|---|---|---|---|---|
| $R_{th\ (j-a)}$ | Junction-ambient Thermal Resistance | Max. | 80 | °C/W |

8146-02.TBL

## ELECTRICAL CHARACTERISTICS

(refer to test circuit $V_S$ = 24V, $T_j$ = 25°C ; unless otherwise specified)

| Symbol | Parameter | Test Conditions | Min. | Typ. | Max. | Unit |
|---|---|---|---|---|---|---|
| $V_S$ | Supply Voltage | | 15 | 24 | 29 | V |
| $I_S$ | Supply Current | $V_{out}$ = LOW | | 4 | 7 | mA |
| $V_5$ | Reference Voltage | | | 8.2 | | V |
| $V_{7L}$ | Saturation Voltage | $I_O$ = 800mA Sink | | 1.2 | 2 | V |
| $V_{SAT}$ | Diode Forward Voltage | $I_O$ = – 800mA | | 1.1 | 1.7 | V |
| $V_{7H}$ | Saturation Voltage | $I_O$ = 100mA Source | | 0.8 | 1.25 | V |
| $I_{11}$ | Current Sink Pin 11 | | 40 | 60 | 80 | µA |
| $V_9$ | Zener Voltage | $I_9$ = 5mA | 20 | 22 | 24 | V |
| $V_{4T}$ | Vertical Blanking Threshold Voltage | | $V_S$ – 0.5 | $V_S$ | $V_S$ + 0.5 | V |
| $I_4$ | Vertical Blanking Input Current | $V_4$ = 50V | 25 | 50 | 100 | µA |
| $V_2$ | Reference Voltage at Pin 2 | R1 = R2 = 10K | | 1.3 | | V |
| $V_3$ | Reference Voltage at Pin 3 | | | 1.3 | | V |
| $V_{PARO}$ | Parabola Voltage at Pin 12 | $\Delta V_{SE}$ = 0 | | 9.7 | | V |
| $V_C$ | Parabola Voltage at Pin 12 | $\Delta V_{SE}$ = + 0.8V | | 7.05 | | V |

8146-03.TBL





www.valelectronica.com

www.agelectronica.com



**ELECTRICAL CHARACTERISTICS** (continued)
(refer to test circuit $V_S$ = 24V, $T_j$ = 25°C ; unless otherwise specified)

| Symbol | Parameter | Test Conditions | Min. | Typ. | Max. | Unit |
|---|---|---|---|---|---|---|
| $K_A$ | Parabola Coefficient | $K_A = \frac{VA}{VB}$ | | 0.25 | | |
| $K_C$ | Parabola Coefficient | $K_C = \frac{VC}{VB}$, S4 + S5 open | | 1.75 | | |
| $K_5$ | Parabola Coefficient | $K_5 = \frac{VC5}{VC}$, S4 or S5 Closed | | 1.07 | | |
| $K_4$ | Parabola Coefficient | $K_4 = \frac{VC4}{VC}$, S4 + S5 Closed | | 1.17 | | |
| $K_S$ | Parabola Symmetry | $K_S = \frac{VC}{VD}$ | 0.94 | 1.0 | 1.06 | |
| $K_F$ | Flyback Coefficient | $K_F = \frac{VC}{VD}$, V4 = 15V | | 1.0 | | |

8146-04.TBL

**TEST CIRCUIT**

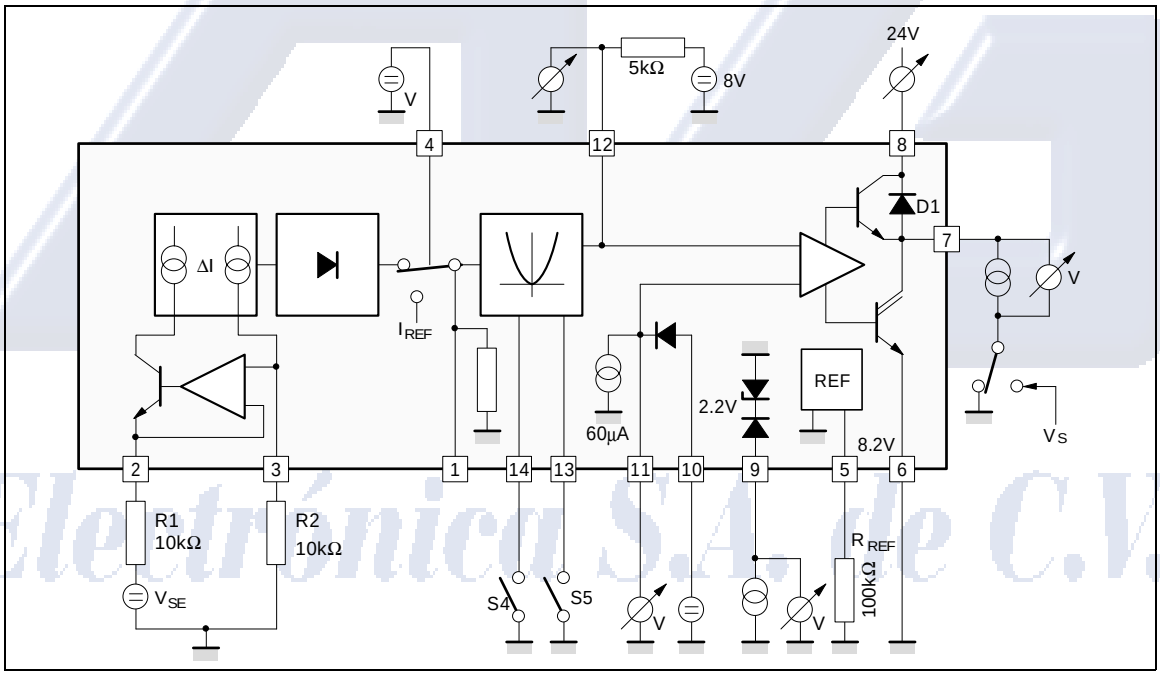


8146-03.EPS



www.agelectronica.com

www.agelectronica.com



## PARABOLA CHARACTERISTICS

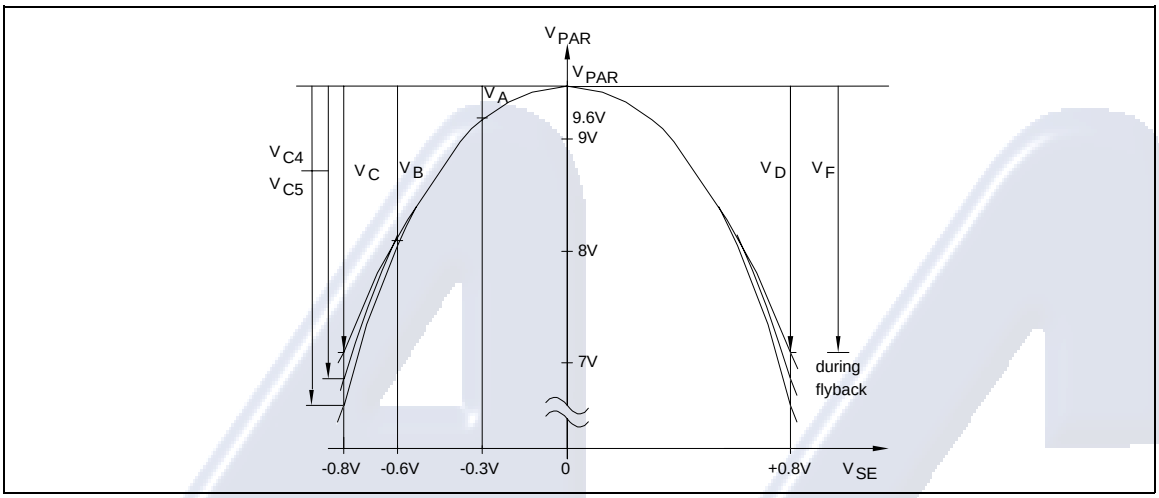


## APPLICATION DIAGRAM

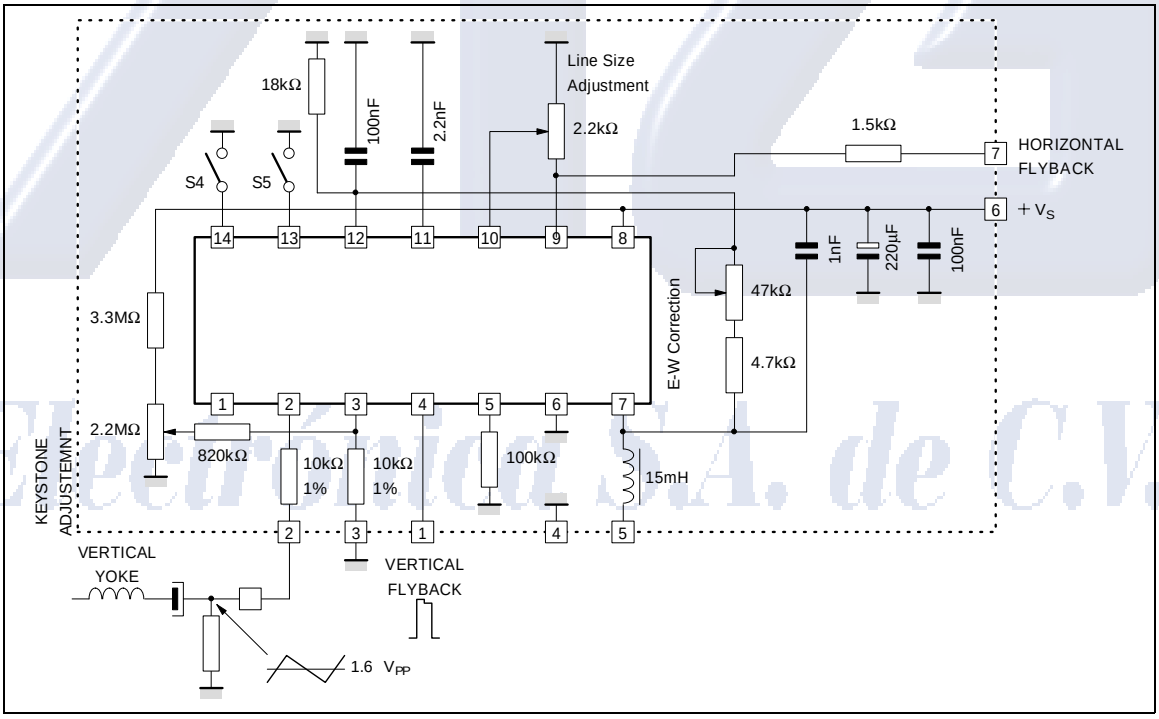






www.agelectronica.com

www.agelectronica.com



## PACKAGE MECHANICAL DATA

14 PINS - PLASTIC DIP

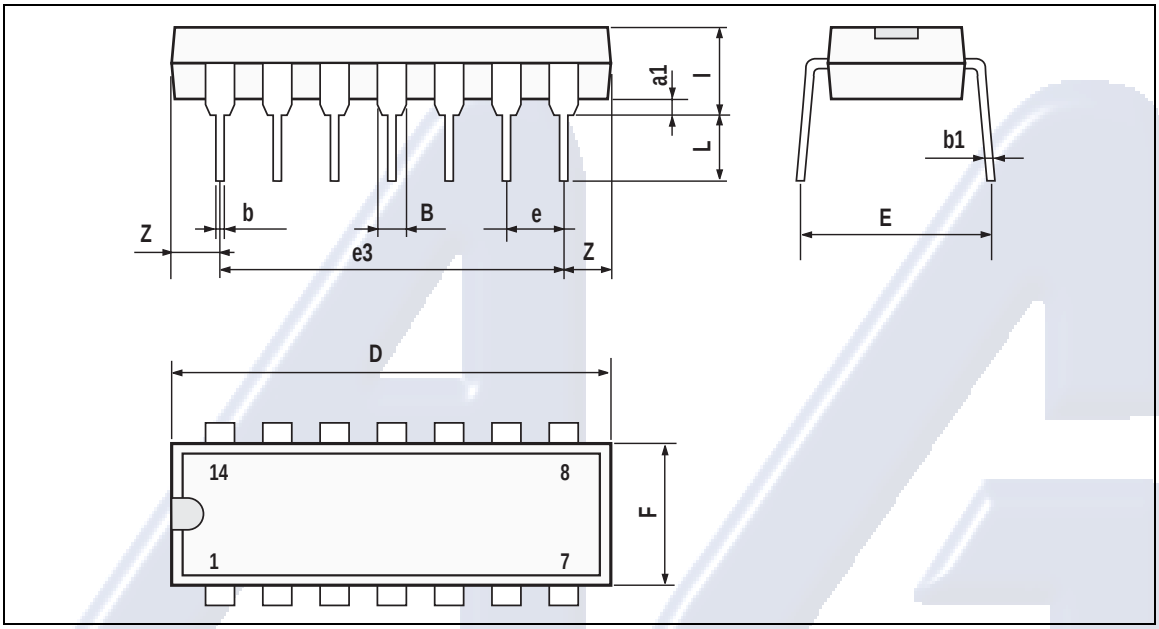


PM-DIP14.EPS

| Dimensions | Millimeters | | | Inches | | |
|---|---|---|---|---|---|---|
| | Min. | Typ. | Max. | Min. | Typ. | Max. |
| a1 | 0.51 | | | 0.020 | | |
| B | 1.39 | | 1.65 | 0.055 | | 0.065 |
| b | | 0.5 | | | 0.020 | |
| b1 | | 0.25 | | | 0.010 | |
| D | | | 20 | | | 0.787 |
| E | | 8.5 | | | 0.335 | |
| e | | 2.54 | | | 0.100 | |
| e3 | | 15.24 | | | 0.600 | |
| F | | | 7.1 | | | 0.280 |
| i | | | 5.1 | | | 0.201 |
| L | | 3.3 | | | 0.130 | |
| Z | 1.27 | | 2.54 | 0.050 | | 0.100 |

DIP14.TBL

**Information furnished is believed to be accurate and reliable. However, SGS-THOMSON Microelectronics assumes no responsibility for the consequences of use of such information nor for any infringement of patents or other rights of third parties which may result from its use. No licence is granted by implication or otherwise under any patent or patent rights of SGS-THOMSON Microelectronics. Specifications mentioned in this publication are subject to change without notice. This publication supersedes and replaces all information previously supplied. SGS-THOMSON Microelectronics products are not authorized for use as critical components in life support devices or systems without express written approval of SGS-THOMSON Microelectronics.**

**© 1994 SGS-THOMSON Microelectronics - All Rights Reserved**

**Purchase of I²C Components of SGS-THOMSON Microelectronics, conveys a license under the Philips I²C Patent. Rights to use these components in a I²C system, is granted provided that the system conforms to the I²C Standard Specifications as defined by Philips.**

**SGS-THOMSON Microelectronics GROUP OF COMPANIES**
Australia - Brazil - China - France - Germany - Hong Kong - Italy - Japan - Korea - Malaysia - Malta - Morocco
The Netherlands - Singapore - Spain - Sweden - Switzerland - Taiwan - Thailand - United Kingdom - U.S.A.



SGS-THOMSON MICROELECTRONICS

www.agelectronica.com